Technical drawings

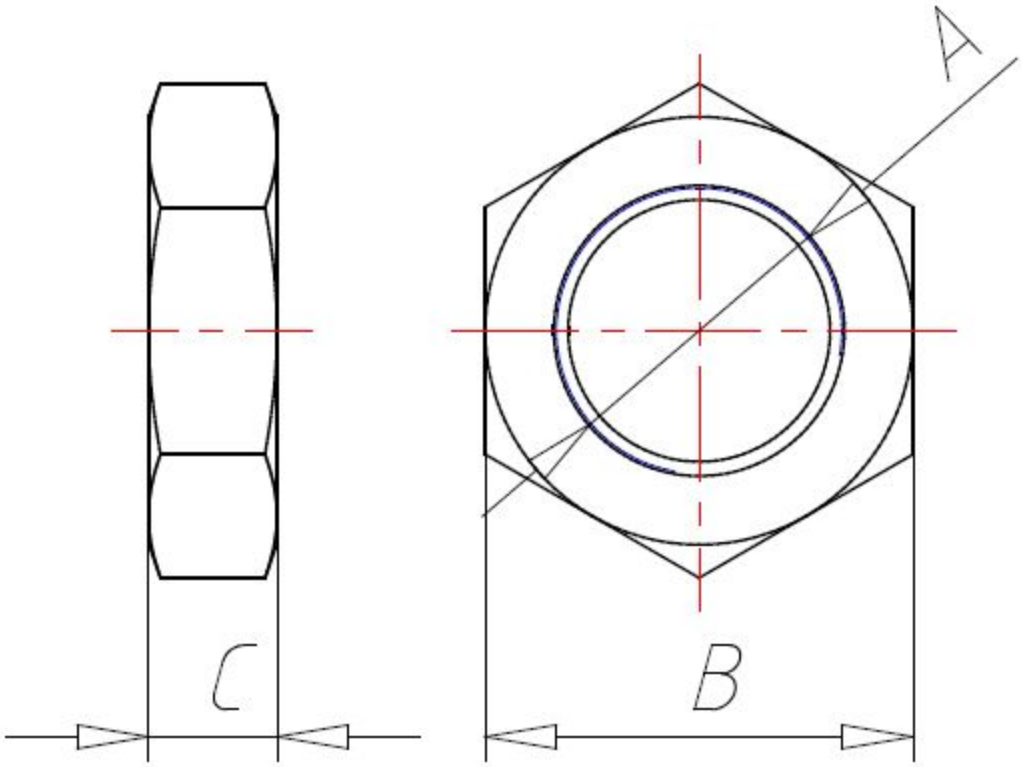

MAT (Material)	Zinc coated steel
A (A)	M27X2
B (B / mm)	41
C (C / mm)	12